Smart4418/6818

2020/01/13:
R463 -> 1K, R485 -> 270K, R150 -> NC, C168 -> 10K
for Smart4418, R486 -> 100K/1%

2022/12/07:
R485 -> 10K

FRIENDLYARM

Smart4418/6818		
Size A3	Document Number 01.Title	Rev 1711
Date: Wednesday, December 07, 2022	Sheet 1 of 14	

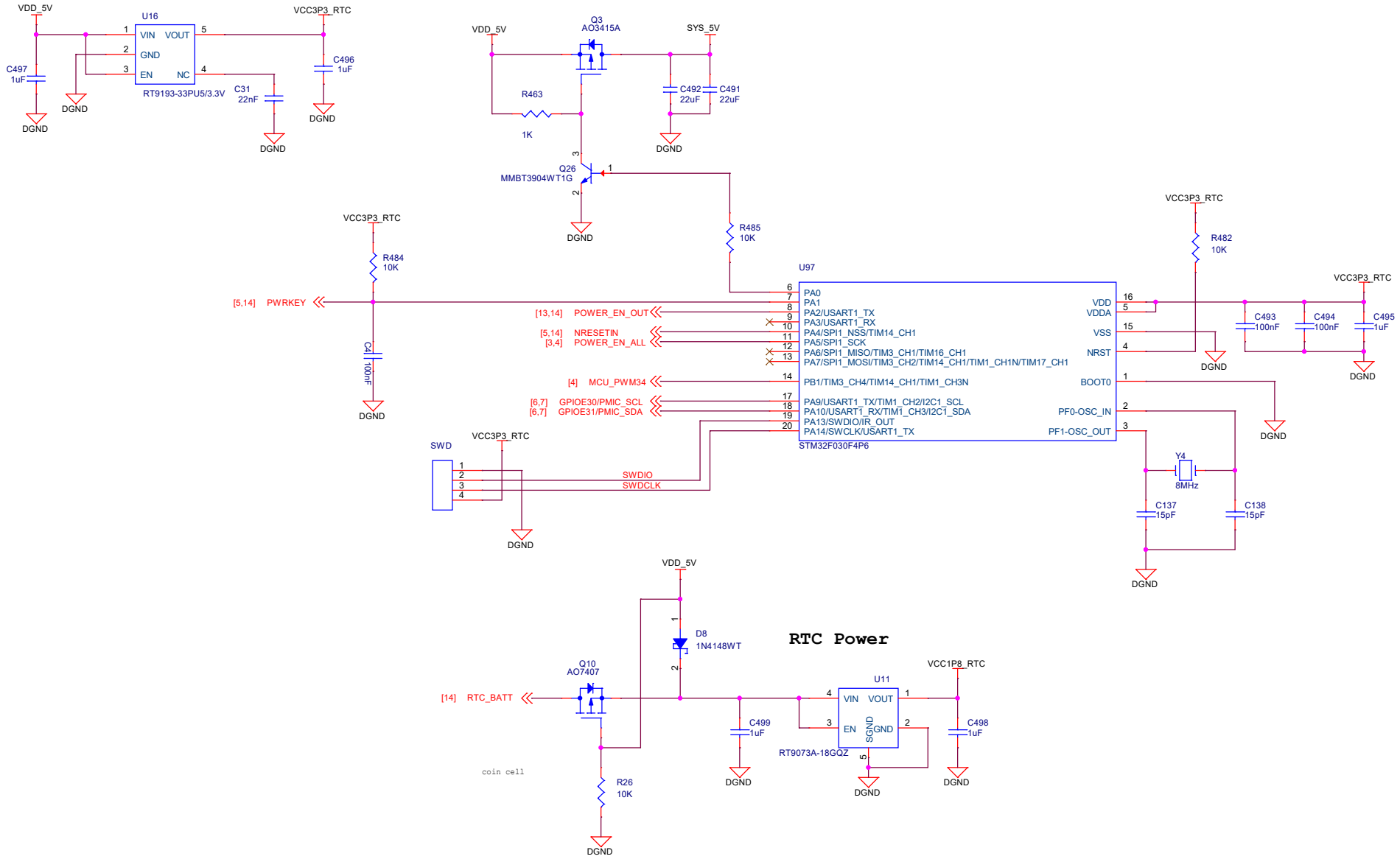

FRIENDLY ELEC

Smart4418/6818		
Size A3	Document Number 02.SPU	Rev 1711
Date: Wednesday, December 07, 2022	Sheet 2 of 14	

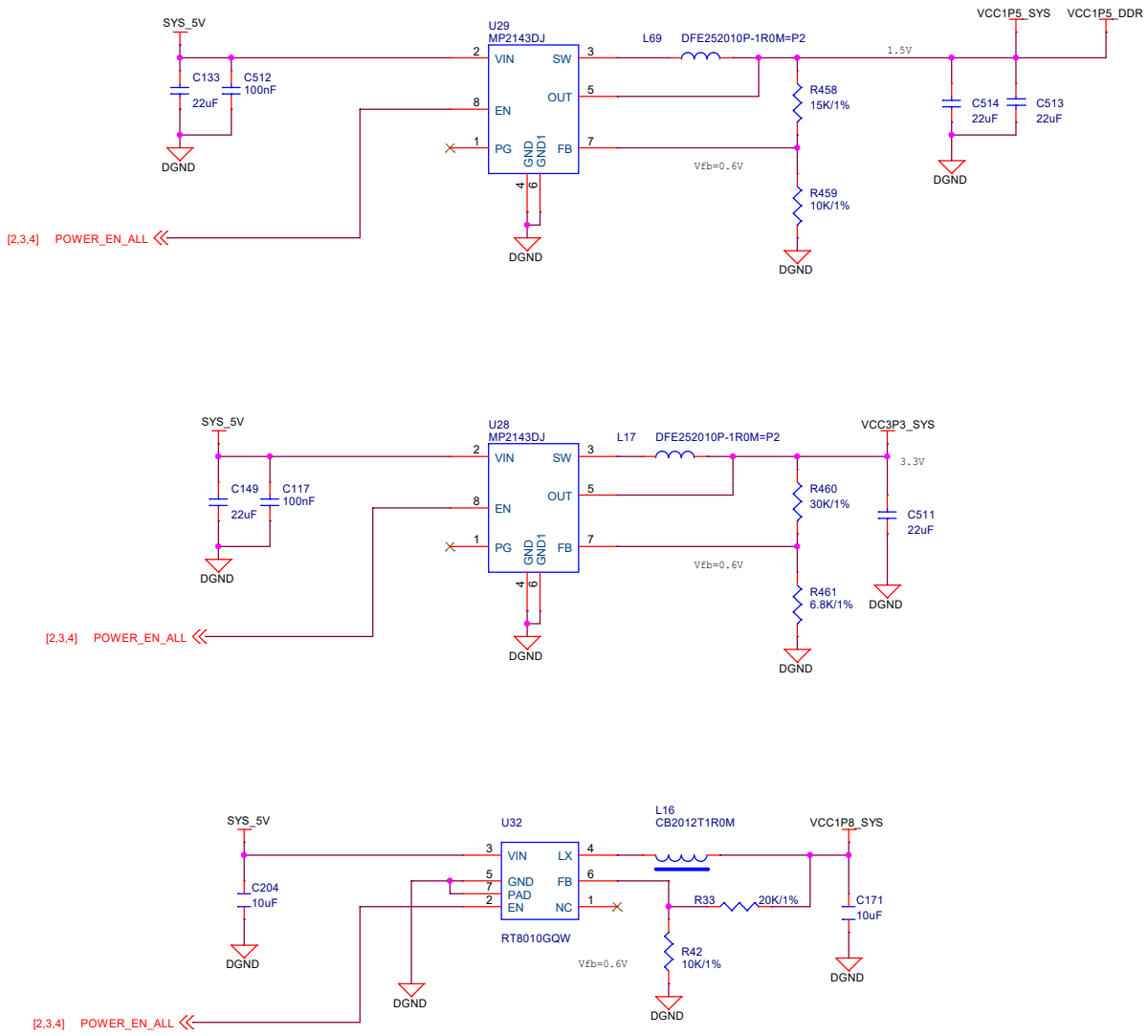

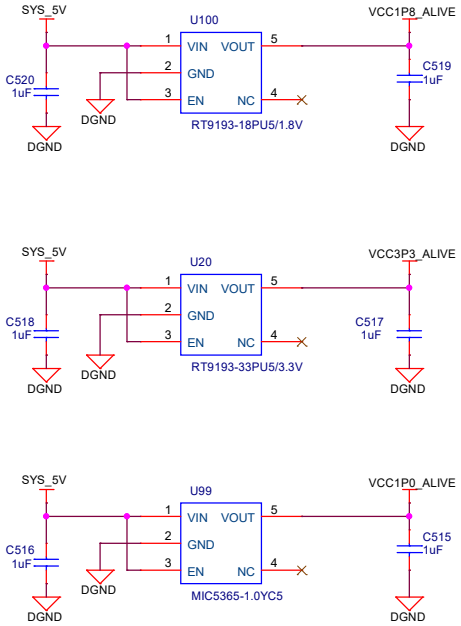

FRIENDLY ELEC

Smart4418/6818		
Size A3	Document Number 03.VDD_DDR/3.3V/1.8V/Alive	Rev 1711
Date: Thursday, July 26, 2018	Sheet 3 of 14	

VDD_ARM

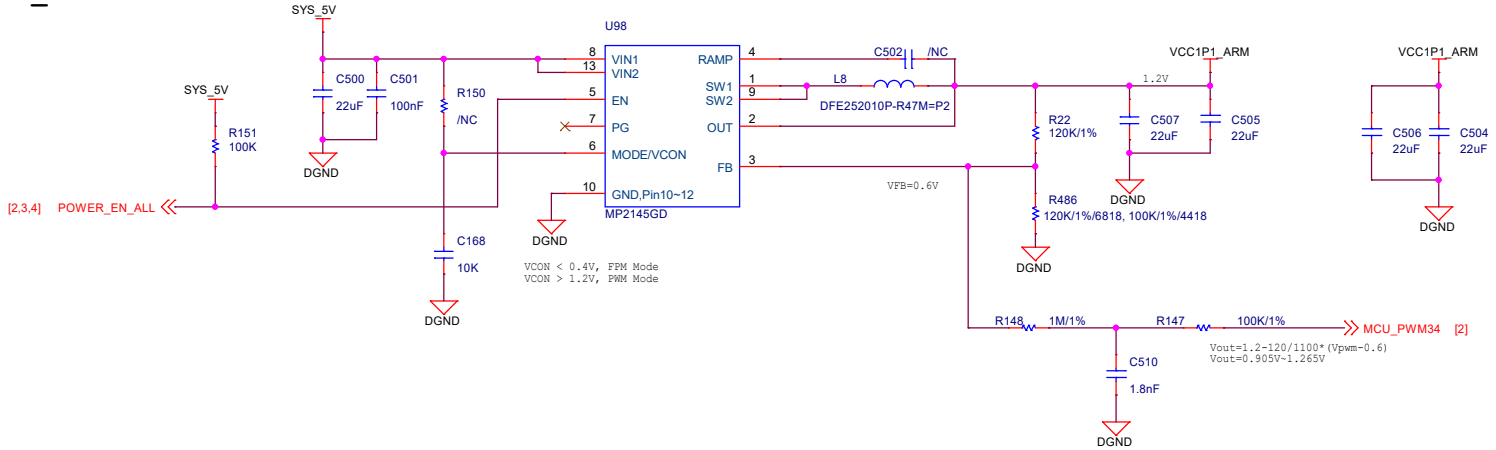

VDD_CORE

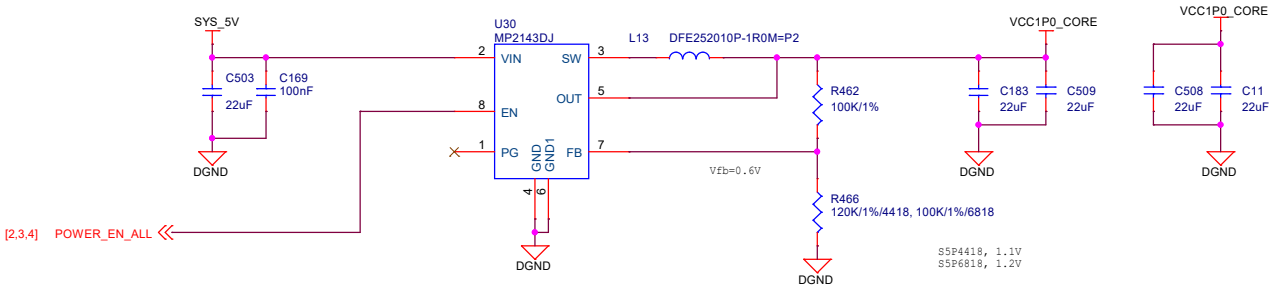

FRIENDLY ELEC

Smart4418/6818		
Size A3	Document Number 04.VDD_ARM/VDD_CORE	Rev 1711
Date: Monday, January 13, 2020	Sheet 4 of 14	

System Reset, Clocks

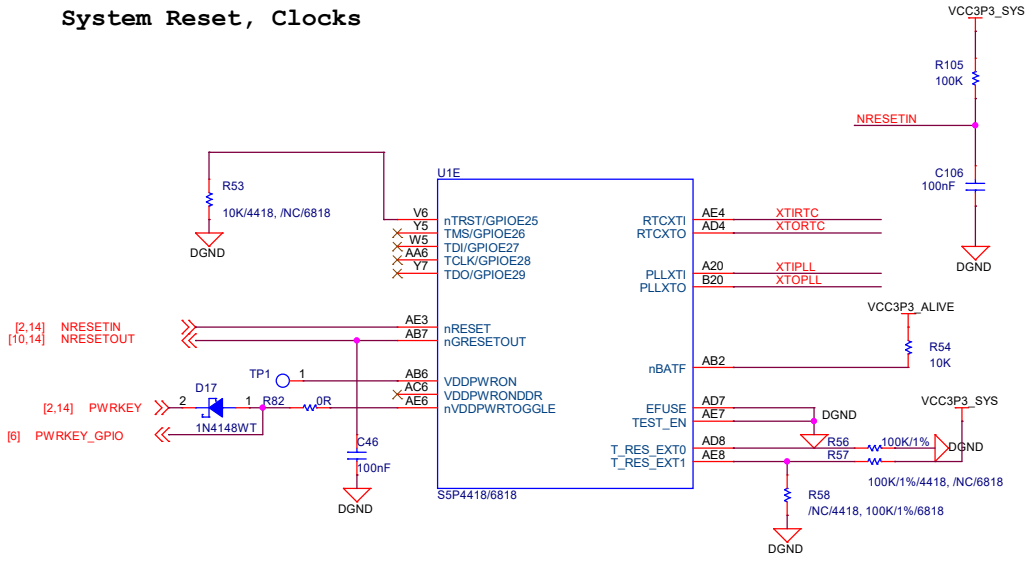

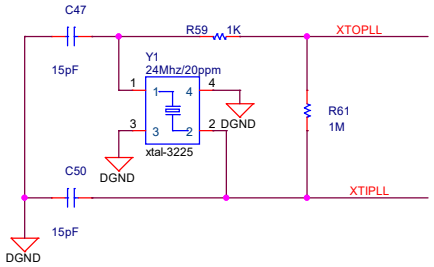

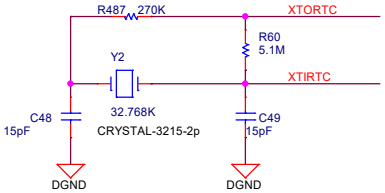

Boot Mode Config

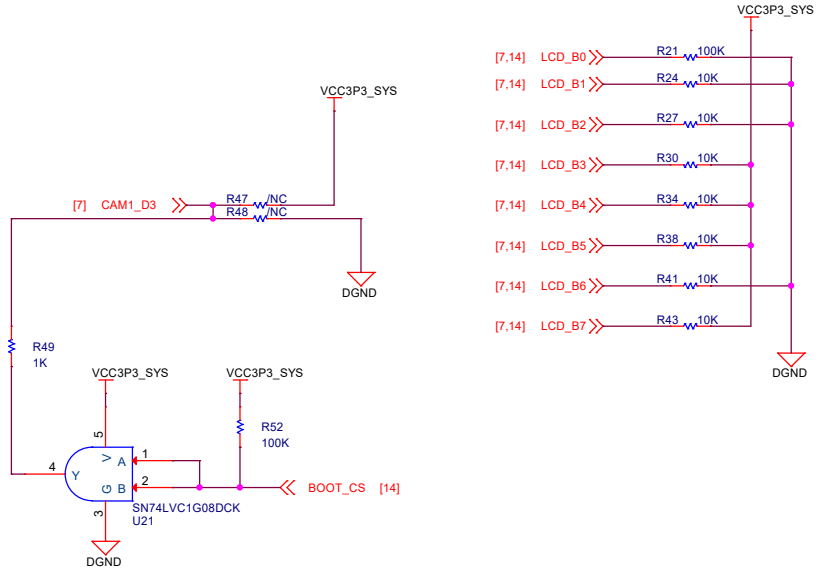

Boot media port select

	CH0	CH1	CH2
SD3	LOW	HIGH	LOW
CAM1_D3	LOW	LOW	HIGH

PCB Version

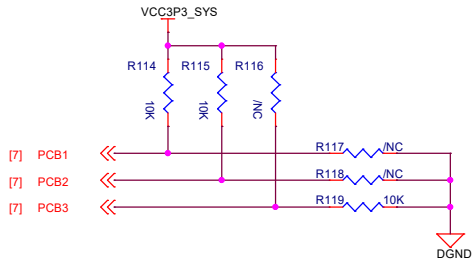

FRIENDLYARM

Smart4418/6818		
Size A3	Document Number 05.AP System Control	Rev 1711
Date: Thursday, July 26, 2018	Sheet 5 of 14	

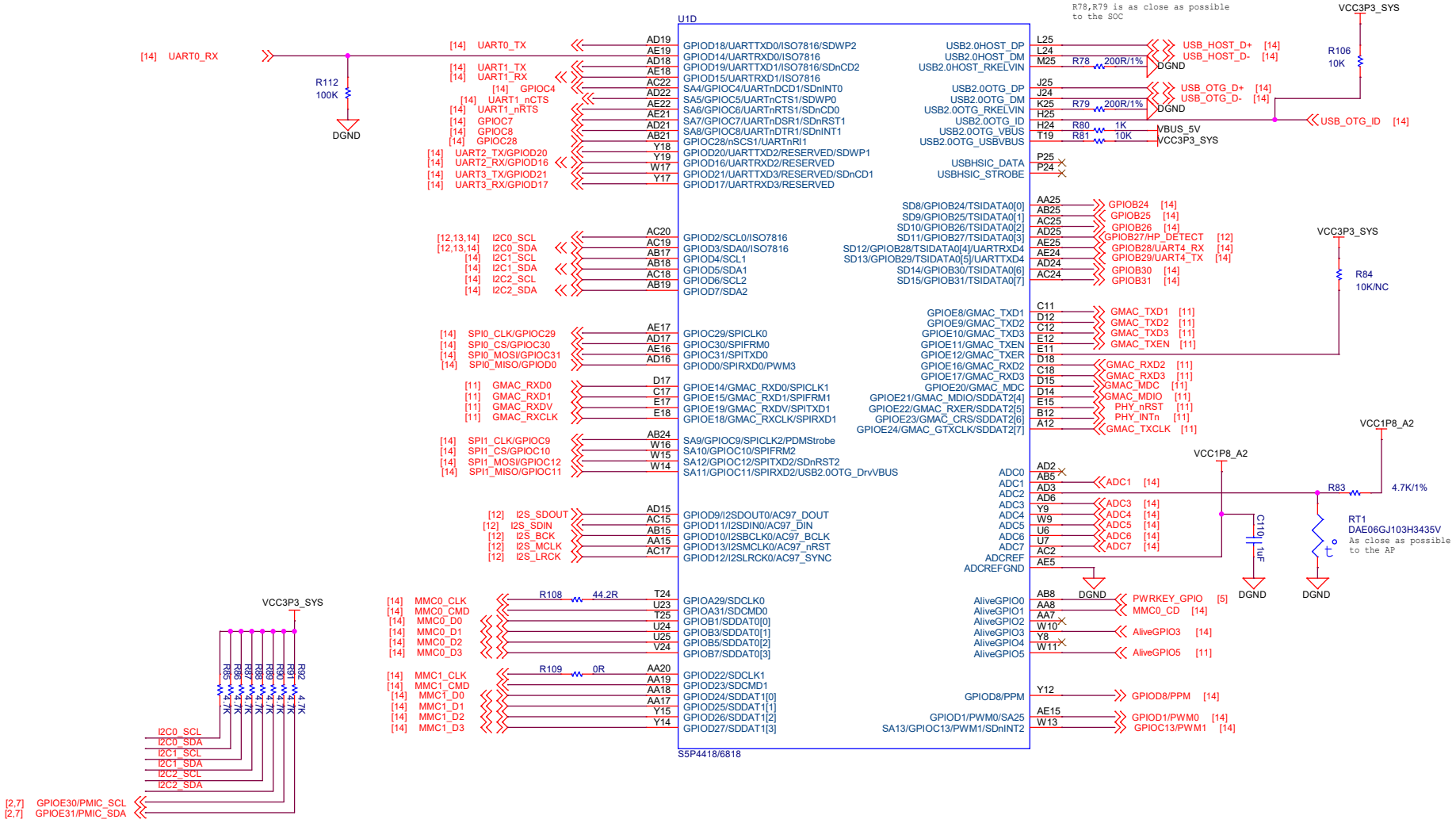

FRIENDLYARM

Smart4418/6818		
Size A3	Document Number 06.AP Peripherals	Rev 1711
Date: Thursday, July 26, 2018	Sheet 6 of 14	

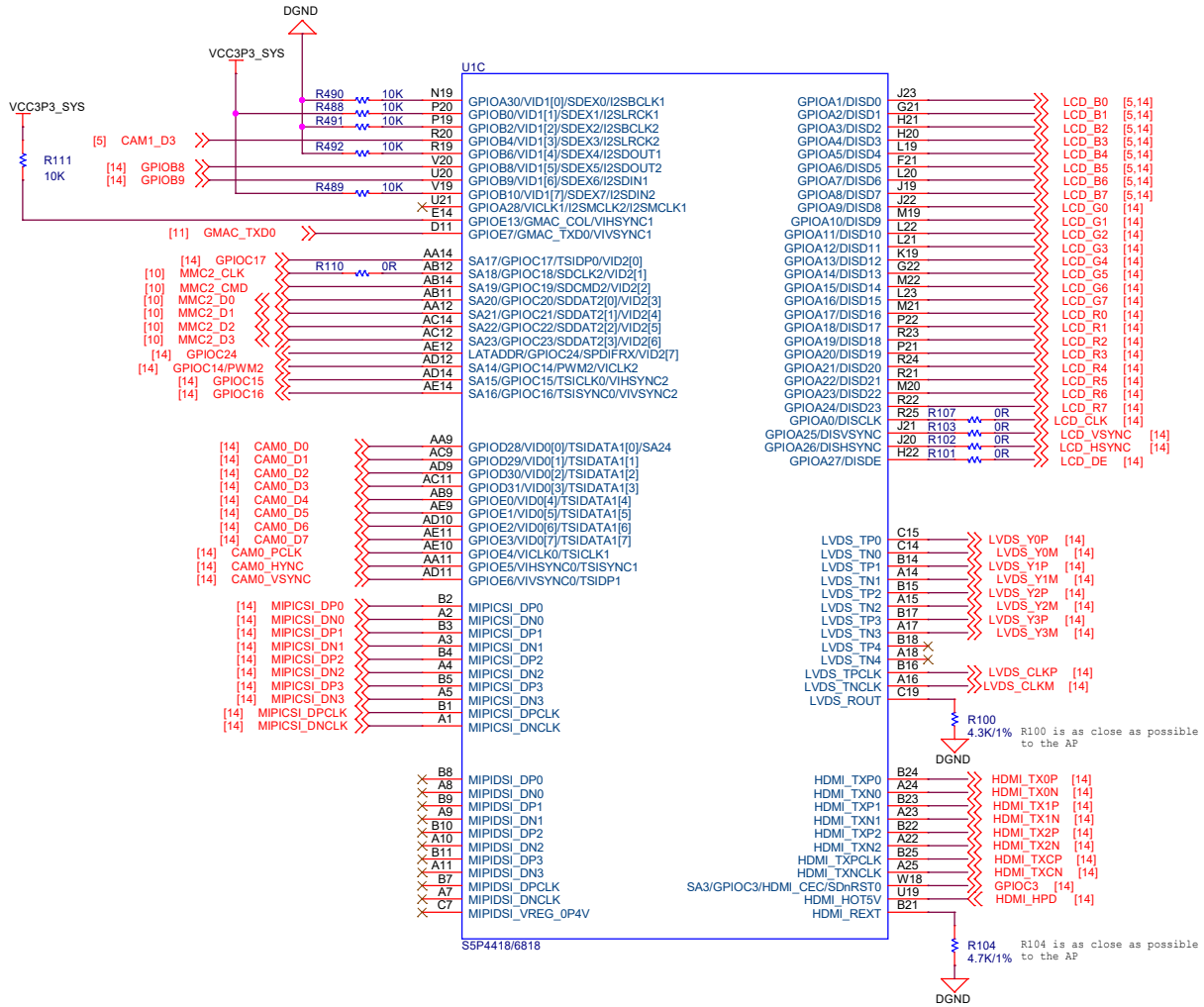

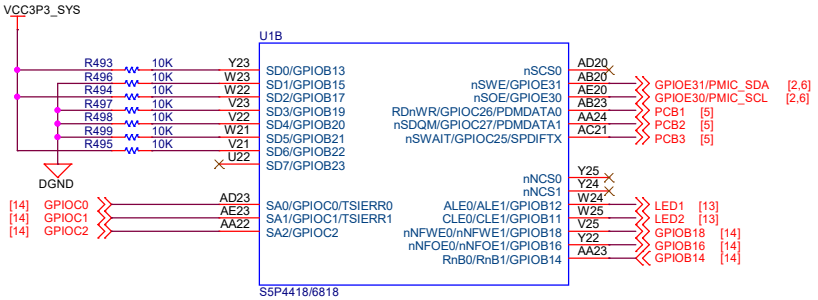

Reserved Function

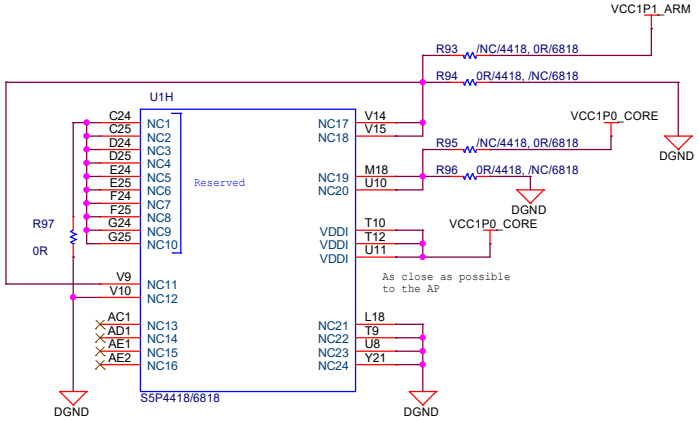

FRIENDLYARM

Smart4418/6818			
Size A3	Document Number 07.AP VIP&Display		Rev 1711
Date: Thursday, July 26, 2018		Sheet 7 of 14	

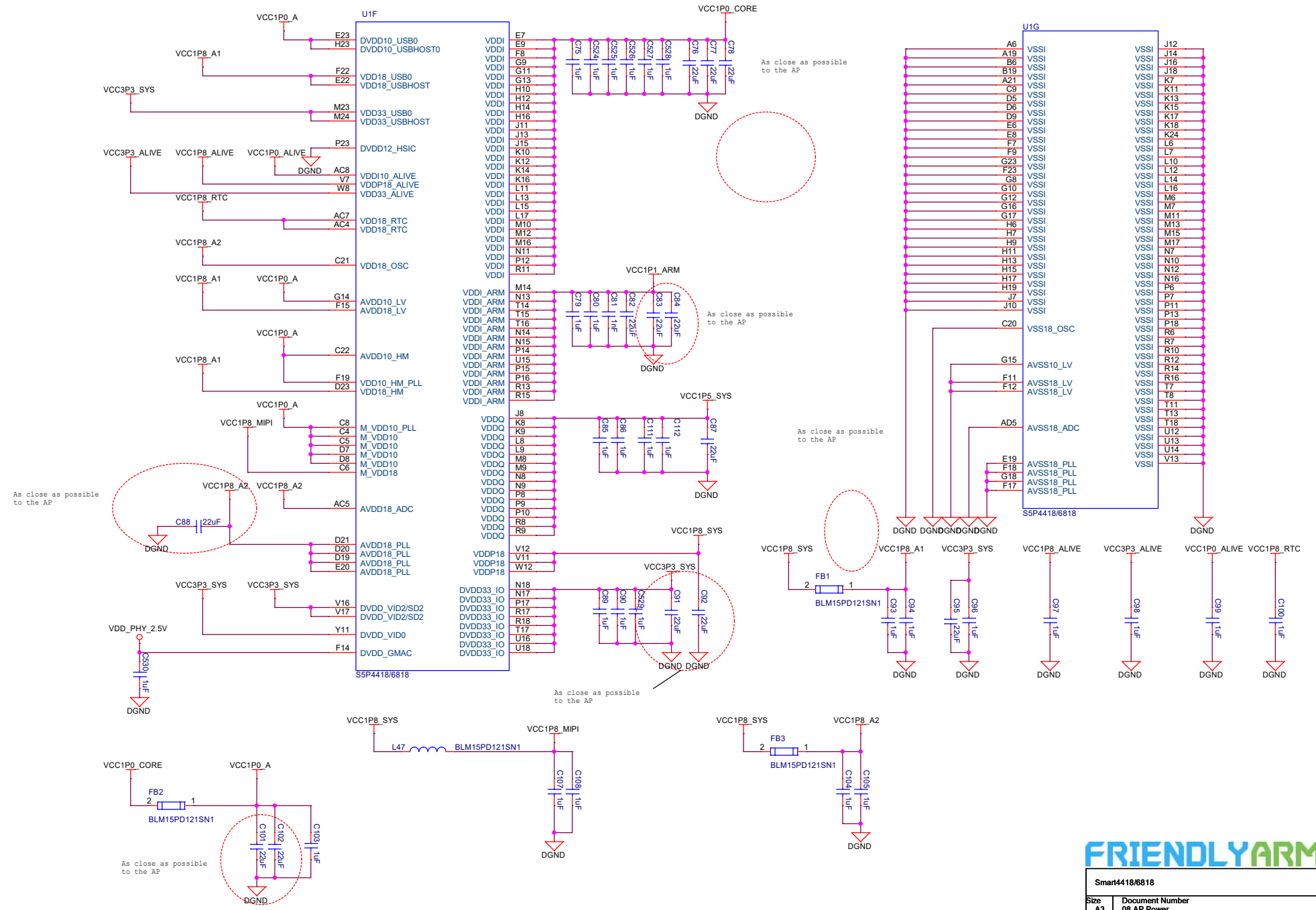

FRIENDLYARM

Smart4418/6818		
Size A3	Document Number 08.AP Power	Rev 1711
Date: Thursday, July 26, 2018	Sheet 8 of 14	

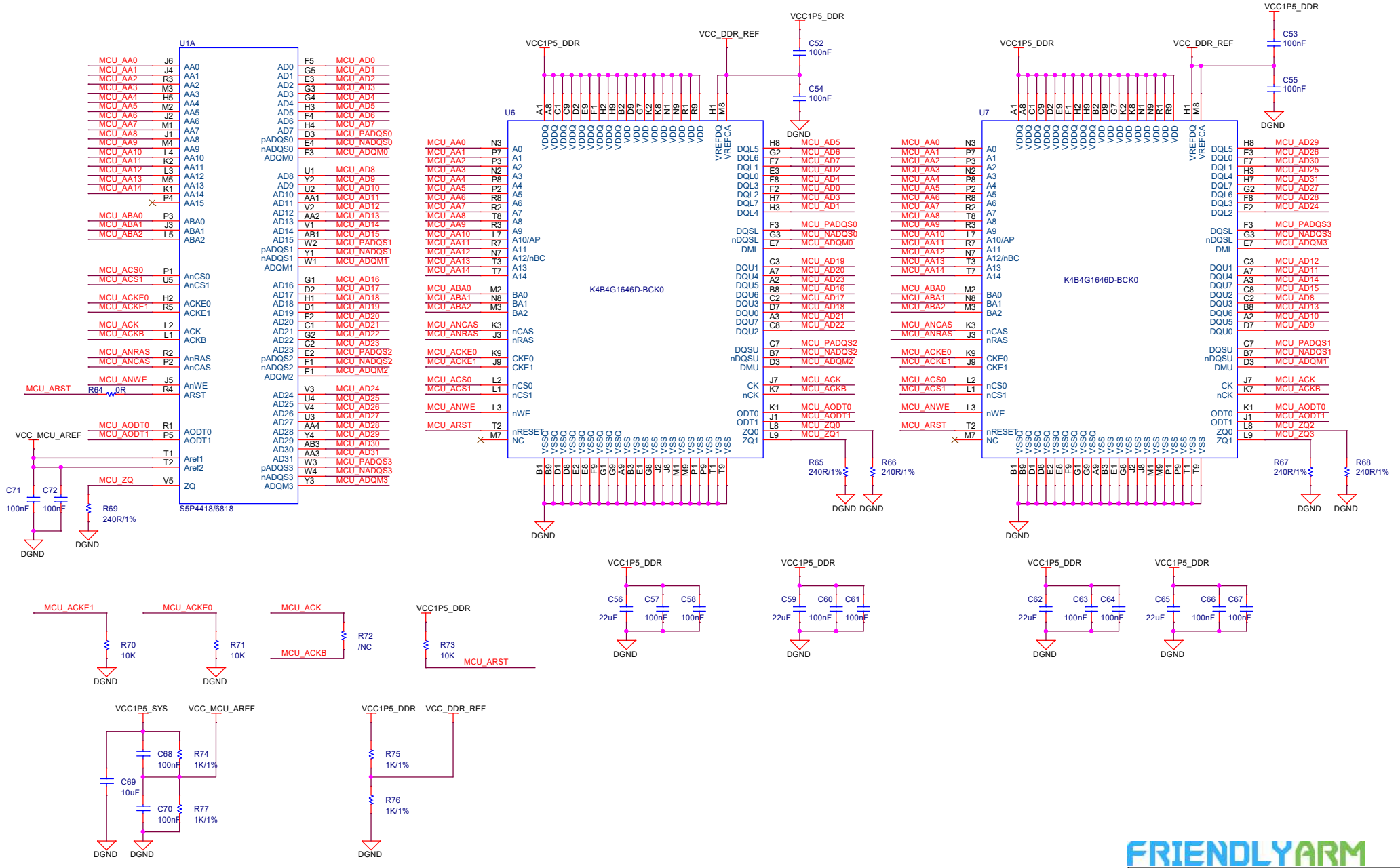

FRIENDLYARM

Smart4418/6818		
Size A3	Document Number 09.DDR III	Rev 1711
Date: Thursday, July 26, 2018	Sheet 9 of 14	

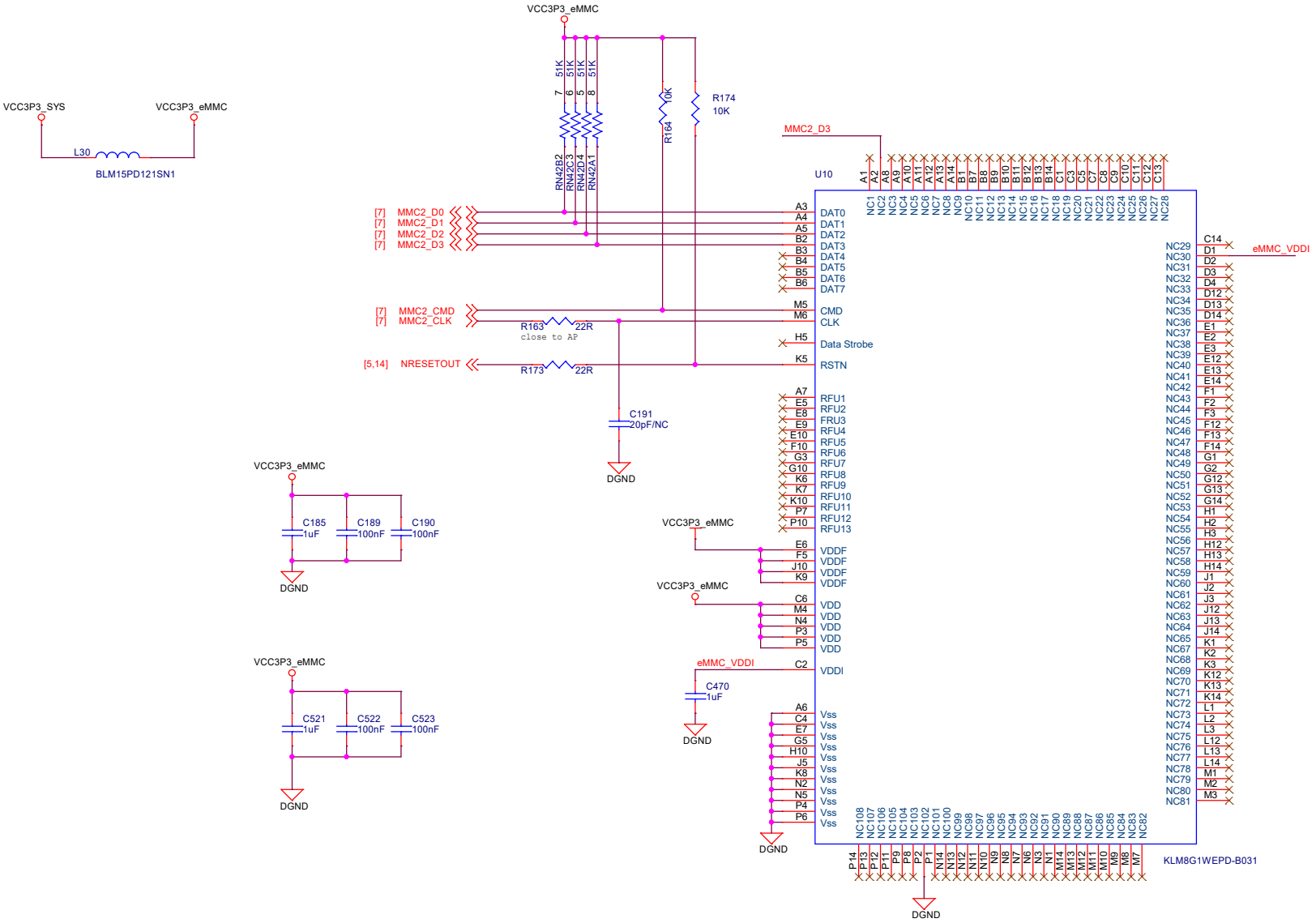

FRIENDLYARM

Smart4418/6818		
Size A3	Document Number 10.eMMC	Rev 1711
Date: Thursday, July 26, 2018	Sheet 10 of 14	

10/100/1000M Ethernet

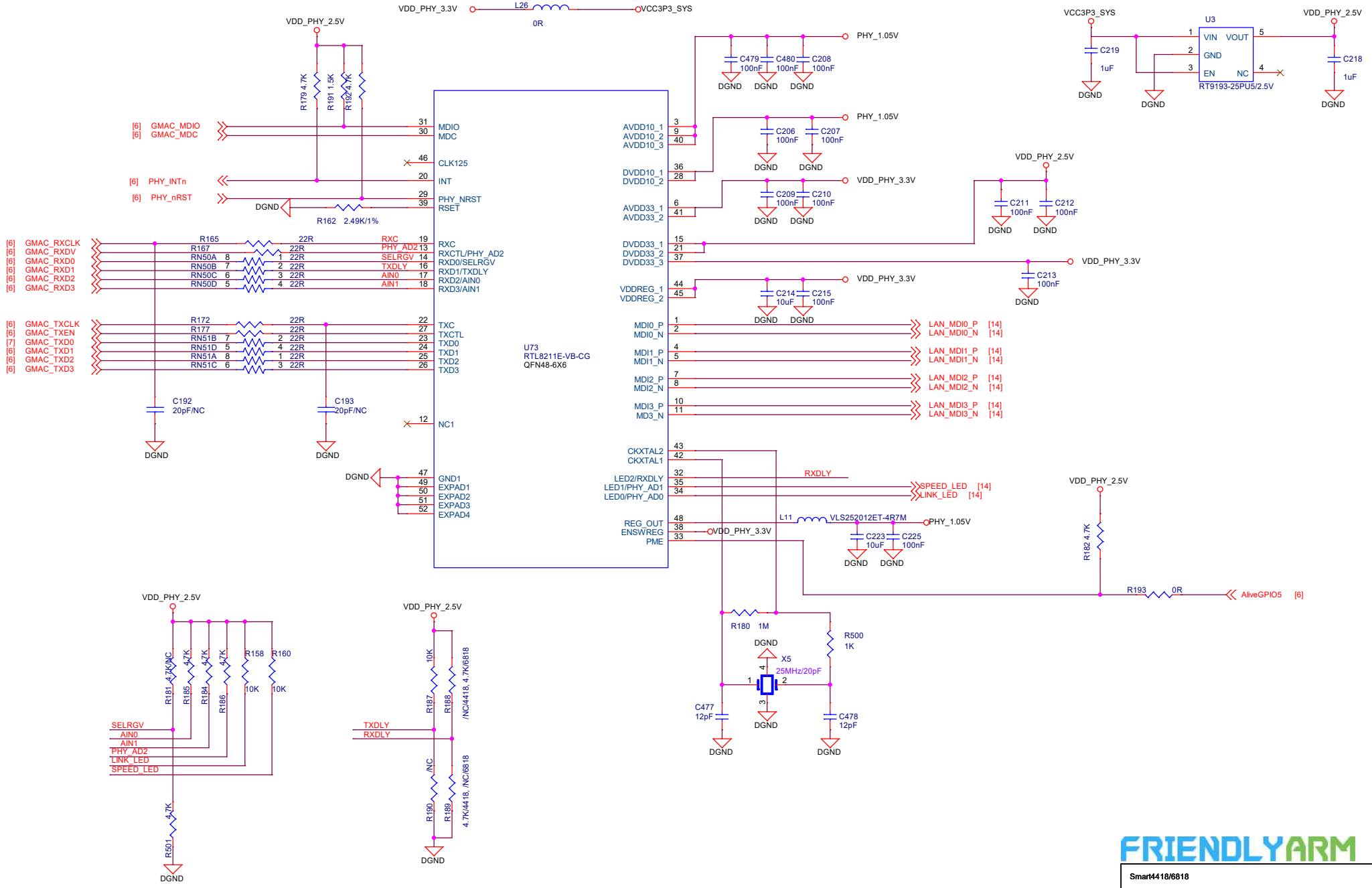

FRIENDLYARM

Smart4418/6818		
Size A3	Document Number 11.LAN PHY	Rev 1711
Date: Thursday, July 26, 2018	Sheet 11 of 14	

Audio

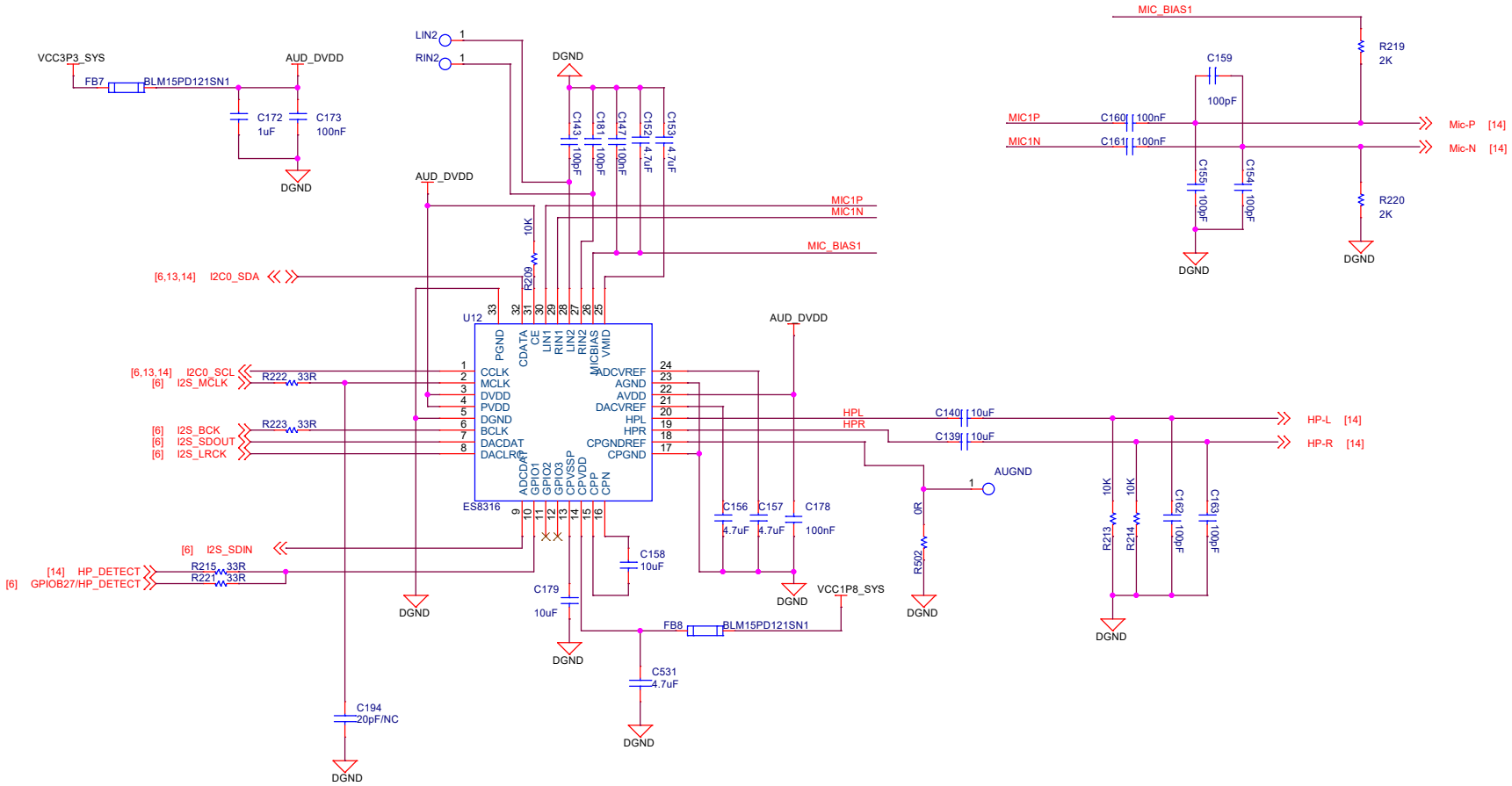

FRIENDLYARM

Smart4418		
Size A3	Document Number Smart4418/6818	Rev 1711
Date: Thursday, July 26, 2018	Sheet 12 of 14	

CryptoAuthentication

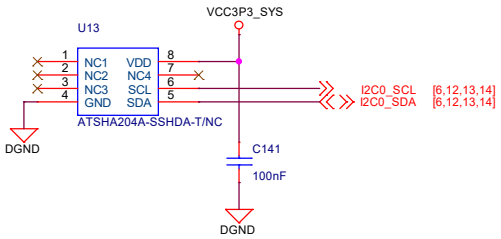

EEPROM with MAC Address

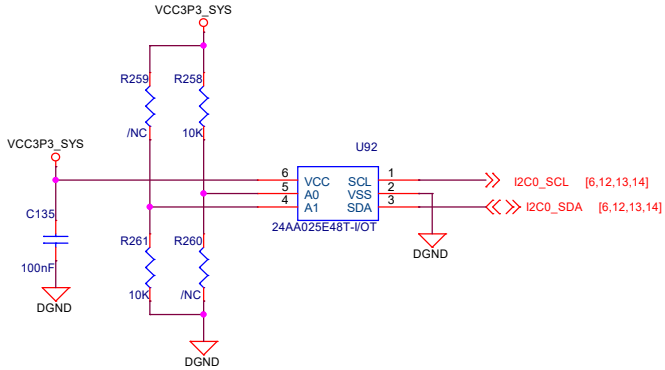

LEDs

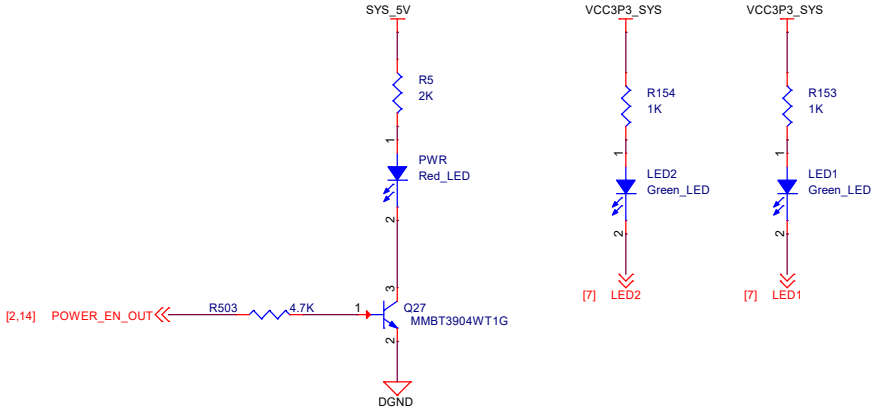

FRIENDLYARM

Smart4418/6818		
Size A3	Document Number 13.EEPROM, SHA-256	Rev 1711
Date: Thursday, July 26, 2018	Sheet 13 of 14	

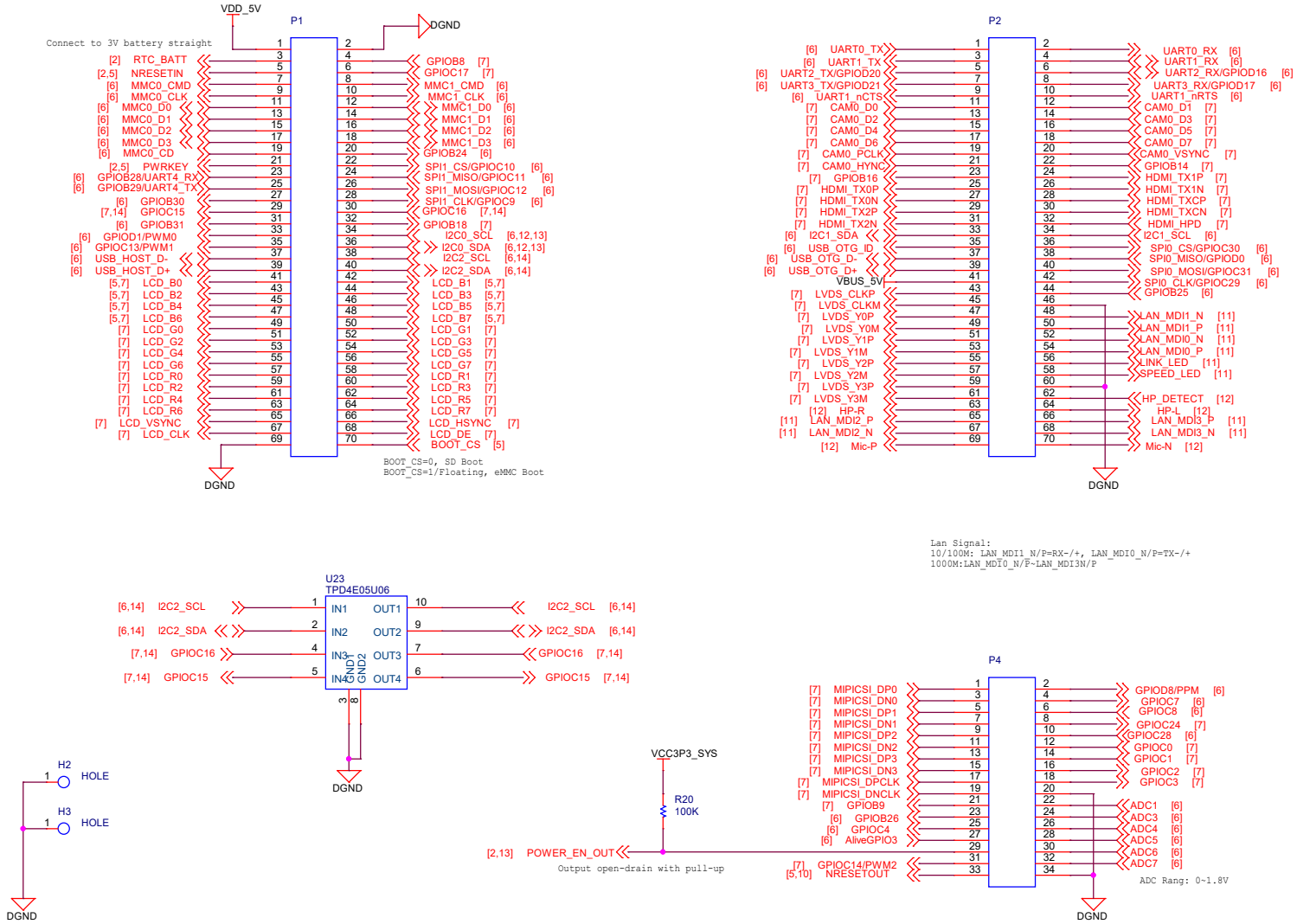

FRIENDLYARM

Smart4418/6818			
Size A3	Document Number 14.Connector		Rev 1711
Date: Thursday, July 26, 2018	Sheet 14 of 14		